Announcements

- Programming Project 3 is ongoing, due March 26th
- Quiz 4 (on Topic 4) is this Thursday March 19th
- Midterm grades will be released later this evening. You'll have a week to request regrades. Reminder that exam regrade requests must be directed by email to me. I regrade the whole exam, not just the parts you request.

Topic 6: Searching Linear Structures

By: Professor Lynam

Sequential (Linear) Search

- Scans each element in order of index to find a specific element. (Typically returns false or none/null upon failure)
- Best Case: O(1) – if the target is at list[0]
- Worst Case: O(n) – if the target is at list[len-1] or if the target is not found
- Average Case (assuming only successful searches): when all targets are equally likely. Let's sum up the number of comparisons we have to make at each index.
- If the target is at index 1, just 1 comparison, if at 2, then 2 comparisons… if at n, then n comparisons

Sequential (Linear) Search

- To the find the average of all of these cases, since each is equally likely, and there are n cases to consider, we can just add them all up and divide by n:
- $\frac{1+2+\cdots+n}{n} = \frac{\sum_1^n i}{n}$
- $\frac{\sum_1^n i}{n} = \frac{\frac{n*(n+1)}{2}}{n} = \frac{n+1}{2}$ which is Big-O of…?
- O(n)
- Which is obvious, but it is good to establish what we mean by the "average" search case

Binary Search

- Binary search needs, ordered data and a direct-access data structure

0	1	2	3	4	5	6	7	8	9	10
2	6	7	14	19	21	36	42	61	77	81

- Target: 14

Probe	Low	High	Mid	Key Comparison
1	0	10	5	21 > 14; eliminate top portion
2	0	4	2	7 < 14; eliminate bottom portion
3	3	4	3	14 = 14; return success

Binary Search

- Binary search needs, ordered data and a direct-access data structure

0	1	2	3	4	5	6	7	8	9	10
2	6	7	14	19	21	36	42	61	77	81

- Target: 63

Probe	Low	High	Mid	Key Comparison
1	0	10	5	21 < 63; eliminate bottom portion
2	6	10	8	61 < 63; eliminate bottom portion
3	9	10	9	77 > 63; eliminate top portion
4	9	8	-	High and low crossed; return failure

Binary Search

- Binary search efficiency:

# keys examined:	1	2	3	…	k	$\log_2 x + 1$
# keys in list:	1	3	7	…	$2^k - 1$	x

- A different perspective… # of probes per index. Let n = 15. Let's see how many probes it takes to find any given value in the list.

0	1	2	3	4	5	6	7	8	9	10	11	12	13	14
4	3	4	2	4	3	4	1	4	3	4	2	4	3	4

- So, assuming all keys are equally likely to be searched, over 50% of the time we're performing the maximum number of probes!

Binary Search

- Given those perspectives, the analysis is straight-forward:
- Best Case: O(1), when the target is at the midpoint
- Worst Case: O($\log_2 n$), for the maximum number of probes
- Average Case: O($\log_2 n$), since ½ of the possible targets are the worst-case

Binary Search

- Binary search is pretty efficient! Can it be improved though?
- Yes, *if* the data cooperates. We'll need:

1. Binary Search's preconditions (ordered data, direct-access structure)
2. A *lot* of data to be searched
3. Data that is uniformly-distributed (no clusters or gaps)

- Those additional conditions allow us to <u>interpolate</u> a target's likely location within the data, leading to…

Interpolation Search

- Suppose we need to find 780 with the array below:

	0 (low)	1	2		77		99 (high)
List:	10	20	30	…	780	…	1000

- 780 is $\frac{780-10}{1000-10} = \frac{7}{9}$ths into the data's range (10 to 1000).
- Let's guess that 780's location is $\frac{7}{9}$ths into the range of indices, starting from the low index of that range:
- probe = $low + \left\lfloor \frac{target-list[low]}{list[hi]-list[low]} * (high - low) \right\rfloor$
- $0 + \left\lfloor \frac{780-10}{1000-10} * (99 - 0) \right\rfloor = 77$

Interpolation Search

- What about when the data's distribution isn't *perfectly* uniform?
- For example, suppose we have list[0…9999], keys 5…95,000, and target is 85,000. What would our first probe be?
- First probe: $0 + \left\lfloor \frac{85000-5}{95000-5} * (9999 - 0) \right\rfloor = 8946$
- Suppose we find 86,500 at list[8946]. 85,000 is smaller, so we just slide the 'high' down to index 8945.
- Assuming list[8945]=86487, what would our second probe be?
- $0 + \left\lfloor \frac{85000-5}{86487-5} * (8945 - 0) \right\rfloor = 8791$
- Just continue the search like this until success or failure!

Interpolation Search

- Interpolation search is just binary search with a different formula for selecting probe indices… but the efficiency analysis is not the same
- Best Case: O(1), when the target is at list[probe]
- Worst Case: O(n), when the data is badly distributed!
- Average Case: O($\log_2(\log_2 n)$); it's a very complex analysis
- Is interpolation search even worth it, given the worst case is the same as sequential search?

N=	2^5	2^{10}	2^{20}	2^{30}	2^{40}
$\log_2 n$	5	10	20	30	40
$\log_2(\log_2 n)$	2.3	3.3	4.3	4.9	5.3

Introduction to Hashing

- Ideally, what would we want our search big-O to always be?
- O(1)
- …which we cannot achieve in all cases, but that doesn't mean that we shouldn't try! A way that we've tried to achieve this is via *hashing*

Introduction to Hashing

- A general view of hashing:
- ‘Integerify’ Function: needed when key isn’t already an integer
- Compression Map: brings hash code into the table’s index range
- The hashcode() method in Java’s Object class is an ‘Integerify’ function

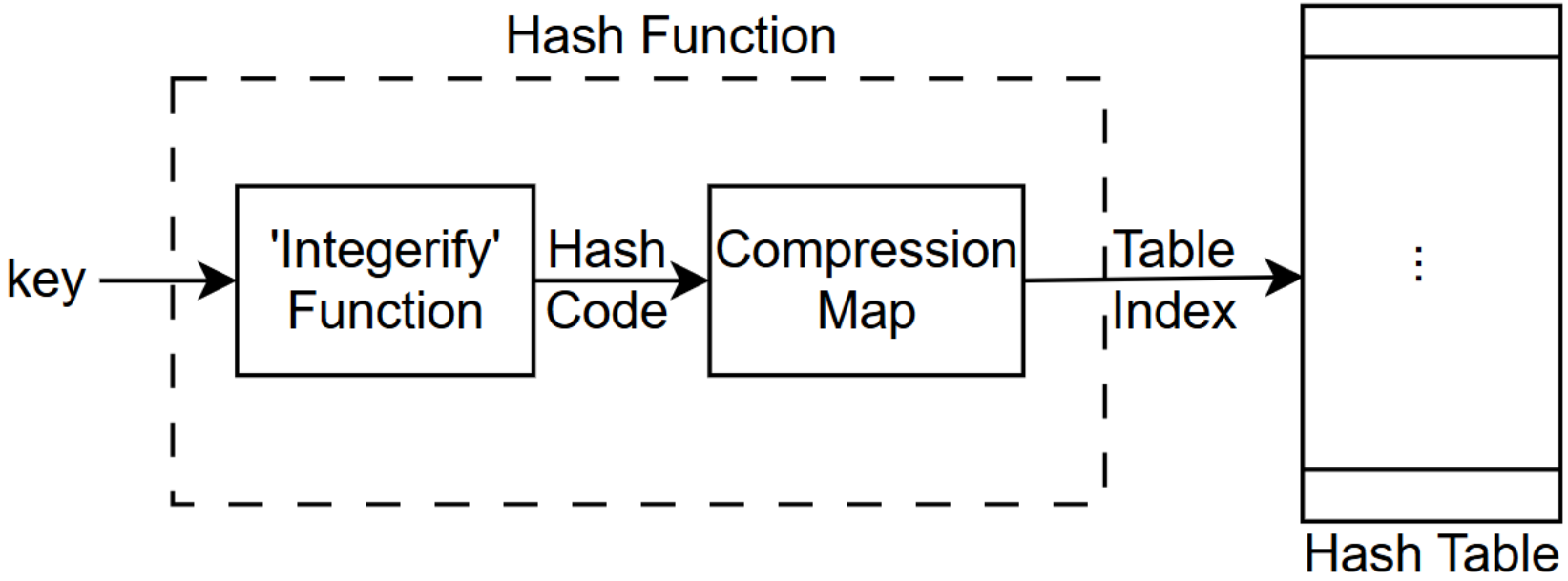

Introduction to Hashing

- The goal of a hash function is to produce well-distributed table indices (like a random number generator, but reproducible)
- There are three classic hash function techniques we'll be covering:

1. Division Method
2. Multiplication Method
3. The 'MAD' Method (Multiplication, Addition, Division)

Introduction to Hashing

- The Division Method:
- Assuming that the hash table has *m* slots:
- $h(key) = key \% m$
- Considerations when selecting the table size (*m*):
- Available main memory
- Load factor, aka, $\frac{\#\ of\ keys}{table\ size}$ a ratio that, as it approaches 1, causes "collisions"
- Data patterns, such as choosing *m* to be relatively prime to data (consider a bunch of even-numbered data with an even-numbered *m*)

Introduction to Hashing

- The Multiplication Method:
- Why not just stick with division? Divisions (%) are relatively slow to compute. So, why not use a similar operation (multiplication) that is more efficient?
- $h(key) = \lfloor m * (key * A - \lfloor key * A \rfloor) \rfloor$, where *m* is the hash table size, and A is a constant such that 0 < A < 1.
- This hash function works like this: $key * A - \lfloor key * A \rfloor$ will create a value [0, 1). Multiplying that by *m* expands that value to the range of the hash table's indices.

Introduction to Hashing

- The ‘MAD’ Method:
- Addresses another issue with the Division Method: we don’t know that *m* will be a good choice to randomize the indices for the Division Method. So, why not mix up the keys a bit first?
- $h(key) = |a * key + b| \% m$, where a, b ∈ Z^+ and *m* and *a* are relatively prime
- This has the same form as a basic linear congruential function used to produce pseudorandom numbers: $X_{n+1} = (a * X_n + c) \% m$

Collision Resolution Strategies

- A <u>collision</u> occurs when two key values hash to the same table index. There are two primary ways of dealing with this:

1. Open Addressing
2. Chaining

Open Addressing

- Open Addressing: Place the key in the ‘next’ available location within the hash table
- The meaning of ‘next’ depends on the flavor of open addressing used; we’ll discuss a few (linear/quadratic probing, and double hashing)
- The table is treated as circular for the purposes of open addressing; if ‘next’ is off the bottom of the table, just wrap back around to the top

Linear Probing

- The ‘next’ location is just the next larger index (wrapping around if necessary)
- All we need to do to implement this is to ‘wrap’ the hash function with another function:
- $lp(key, i) = (h(key) + i) \% m$
- We parameterize *i* to make walking down the table by any number of indices easy to express

Linear Probing

- Linear probing general function: $lp(key, i) = (h(key) + i) \% m$
- Let's do a specific example. Let $h(key) = key \% 7$. What would *lp()* look like?
- $lp(key, i) = (key \% 7 + i) \% 7$
- Insert 13, 25, 34, 5, and 19 into the hash table.

0	1	2	3	4	5	6
34	19			25	5	13

lp(13, 0) = 6
lp(25, 0) = 4
lp(34, 0) = 6 (collision!)
lp(34, 1) = 0
lp(5, 0) = 5

lp(19, 0) = 5 (collision!)
lp(19, 1) = 6 (collision!)
lp(19, 2) = 0 (collision!)
lp(19, 3) = 1 (finally!)
Looks awfully like linear search…

Linear Probing

- Linear probing general function: $lp(key, i) = (h(key) + i) \% m$
- Let's do a specific example. Let $h(key) = key \% 7$
- $lp(key, i) = (key \% 7 + i) \% 7$
- Searching: Find 34. Then Find 42.

0	1	2	3	4	5	6
34	19			25	5	13

lp(34, 0) = 6, but array[6] = 13, not 34. Have to move on!
lp(34, 1) = 0 Success!
lp(42, 0) = 0, but array[0] = 34, not 42. Move on!
lp(42, 1) = 1, but array[1]=19, not 42. Move on!
lp(42, 2) = 2, which is unused, which means 42 is not in the table

Linear Probing

- There are a few issues with linear probing:

1. Primary clustering: the contiguous ‘blob’ of data that tends to form in one region of the hash table during linear probing, which leads to linear searching.
2. Deletion requires special handling. Suppose we deleted 13.

0	1	2	3	4	5	6
34	19			25	5	~~13~~

- Now we try to find 34 or 19, which results in failure! To deal with this, we leave a ‘breadcrumb’ in [6] to continue 34’s search. This is generally known as ‘lazy deletion’ with a ‘tombstone’

Quadratic Probing

- The idea is avoid primary clustering by ‘jumping ahead instead of just ‘walking’
- The adjustment: we need a new wrapper function around our base hashing function
- $qp(key, i) = (h(key) + c * i + d * i^2) \% m$, where c, d ∈ Z^+ and d != 0 (otherwise it would just be a linear hashing variant)